UniQ™

Compact, Powerful, Reliable

Compact, Powerful, Reliable
UniQ™ marker is a revolutionary and innovative approach to Fiber Laser Marking.

UniQ™ fiber laser marker represent the perfect combination of an high performance fiber laser into a innovative, ultra-compact housing designed to provide an effective solution to the recent request of shorter, smaller production lines, in order to reduce footprint and floor area consumption. Thanks to its advanced internal design, UniQ™ laser marker do not need any 'low-ip grade" external cabinet, controller or power supply, and is totally free from delivery fiber constrains with regard to fiber length or bending radius.

UniQ™ Laser Marker provides all you need for comprehensive and efficient laser marking in one compact, IP54 rated innovative housing that guarantee maximum protection even in harsh factory environments and industrial application. UniQ™ laser marker works seamless with Datalogic's Lighter Suite, a powerful, quick and intuitive marking software, and it fully compatible with the Datalogic I/O standard interface.

LASER MARKING

HIGHLIGHTS

- Powerful 15W fiber laser source
- All-in-one, Fully integrated ultra-compact device
- Rugged IP54 rated housing
- no external rack, no power supply, no other controller needed
- No fiber delivery constraints
- Built-in second generation EMC (Embedded Marking Controller)
- Powered by Lighter software Suite

APPLICATIONS

Automotive: unmatched performance on metals
- High resolution, excellent contrast with low thermal impact.
- Quick and clear black laser annealing, without cracks damage

Electronics: high contrast marking
- High contrast marking on additivated plastic materials
- High speed coding and branding on industrial electronic devices

Medical & surgical tools permanent and clean
- Contactless and Clean Direct Marking Process for Branding & Personalization
- Instant permanent marking: no drying time, no post processing, no solvent or additive

Precision Mechanics :high precision without mechanical stresses
- Clear and precise annealing even on very small surface
- Resistant to wear, corrosion, solvent, water and UV

Packaging
- Direct Part Marking (DPM) of Best before date, production date-lot-plant
- Laser Marking of Optical Characters compatible for OCR/OCV

Allied Automation, Inc.
800-214-0322
www.allied-automation.com

UNIQ™ EXCLUSIVE ADVANTAGES

COMPACTNESS & SIMPLICITY

ALL-IN-ONE: COMPACT & ALL-INCLUSIVE

- No external control unit, power supply required.
- Ultra-Compact , single cabinet device.

NO FIBER DELIVERY CONSTRAINS

- No fiber length limitations
- No limitation on fiber bend radius
- Simplified installation

PERFORMANCES

- Powerful 15W fiber laser source
- Full Lighter Software Suite
- Rugged IP54 rated housing
- Ethernet TCP/IP for simple connection to multiple lasers, vision systems and code readers.
- Silent, high efficiency, patented cooling system
- Easy to setup, easy to use

SAFETY

- Double failsafe interlock circuit
- Double failsafe enable circuit with monitor outputs
- Built in mechanical shutter
- Meets International Safety Standards IEC 11553-1

Designed to meet the modern production demands, the new UniQ™ marker dramatically reduce design effort and installation times for machine builders and end-user.

Thanks to its innovative design UniQ™ embed all the features and devices into a compact, single cabinet design, to simplify the specification of production lines, increasing efficiency and reducing time to market. Quick and easy to install, UniQ™ is fully adaptable to existing infrastructure and provide a real benefit in order to reduce effort in case of production changes or line reconfiguration.

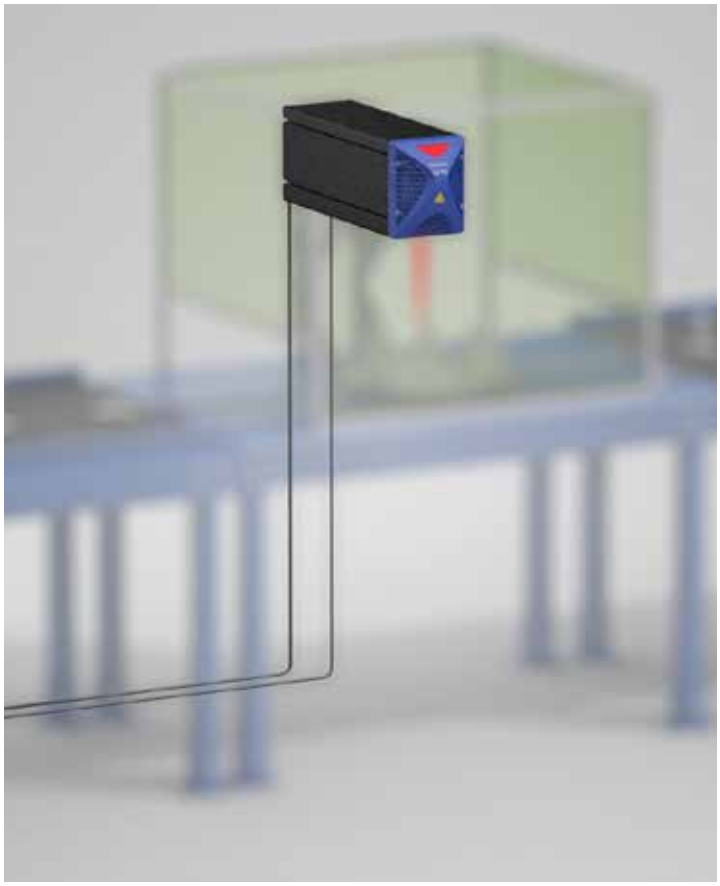

UniQ™ does not require any additional external unit. Integration in production lines is simple and quick and involves only power supply, Ethernet and I/O signals.

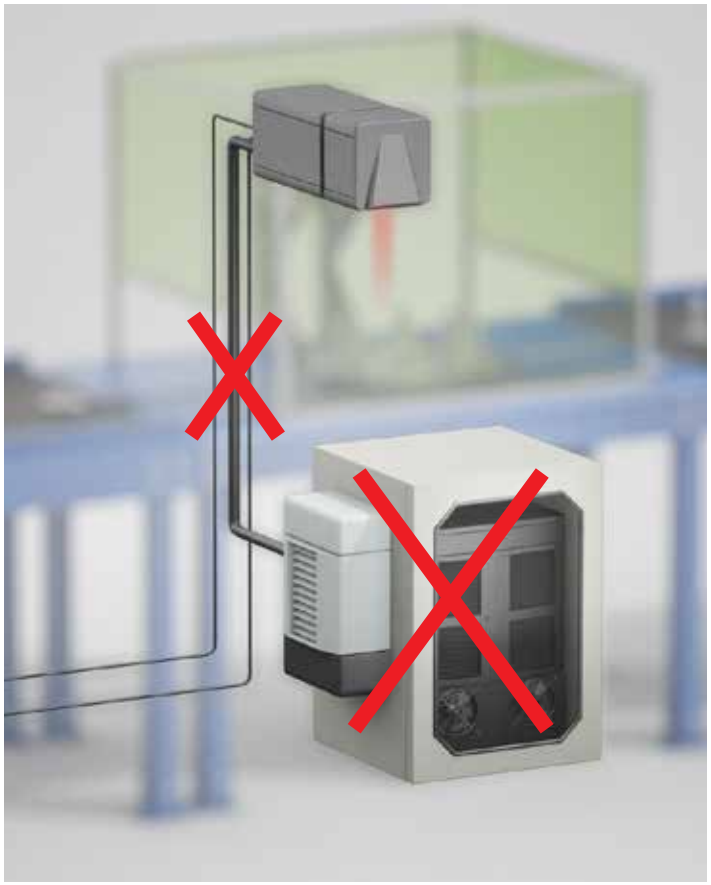

Conventional Fiber Marking System may need additional protective housing for remote controller and complex installation due the limitation of the fiber delivery.

TECHNICAL DATA

Nominal Power	15W
Peak Power	10 kW
Pulse energy	0,75 mJ
Wavelength	1060 – 1080 nm
Laser source	Pulsed Fiber Laser
Modulation	15 kHz ÷ 100 kHz
Pulsewidth (typ.)	120 nsec
Marking capabilities	Standing, Rotary axis, On the fly (marking in motion)
Integration	Integrated stage controller up to 4 axes (stepper motor) Up to 10 digital inputs and 10 digital output fully programmable dedicated connectors for Datalogic's Encoder and Photocell
Interface	Ethernet, RS 232, 4x USB
Aiming & Focus Beam	Class II Semiconductor laser @ 635 nm
Temperature Range	5°C to 40°C
Protection degree	IP54
Power Supply	Embedded : 100/240 VAC – 50/60 Hz
Dimension (LxHxW)	479 x 183 x 150
Weight	10,4 kg

All laser sources described in this product guide are Class 4 laser sources.
Laser interaction with organic or inorganic material can cause TOXIC FUMES/PARTICLES. The OEM laser components described in this product guide is for sale solely to qualified manufacturers, who shall provide interlocks, indicators and other appropriate safety features in full compliance with applicable national and local regulations.

High efficiency, low noise,
environment-resistant,
air cooling system - (patent pending)

EasyFix mounting rail for accessories

Twin beams for easy focus finding

DIMENSIONS

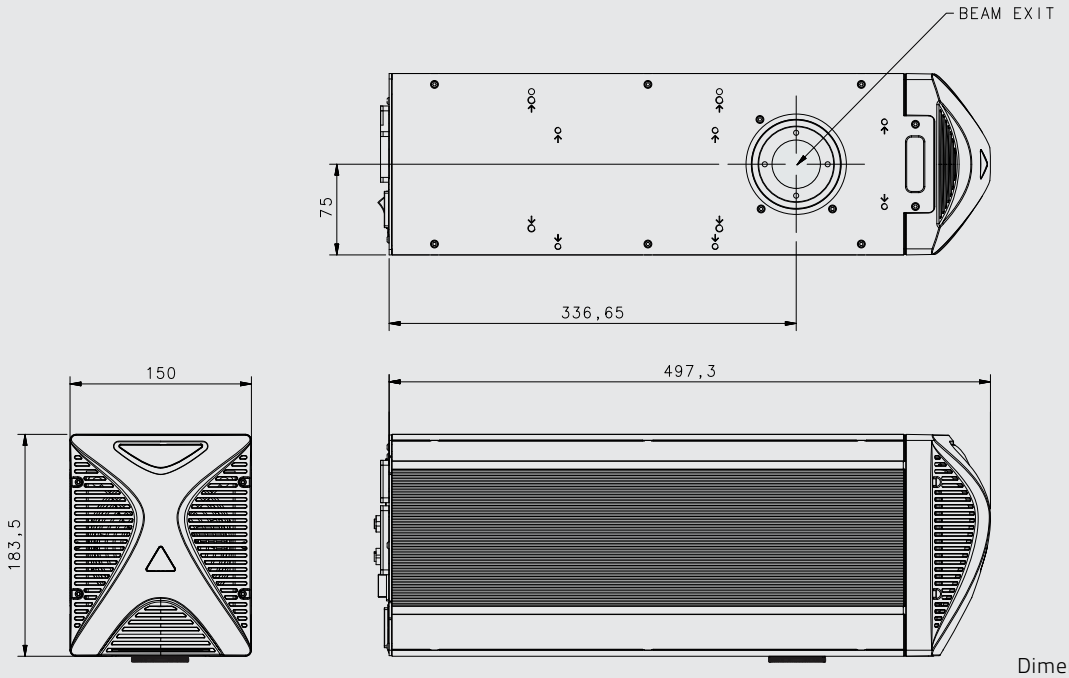

Dimensions in mm

MODEL SELECTION AND ORDER INFORMATION

ORDER NUMBER	DESCRIPTION	FULL DESCRIPTION
986101000	UNIQ 1150-1040 IR Fiber System	UniQ Fiber Laser Marker 15W@1064 Without F-theta Lens
986101010	UNIQ 1150-1340 IR Fiber System	UniQ Fiber Laser Marker 15W@1064 With 160S F-Theta Lens
986101020	UNIQ 1150-1640 IR Fiber System	UniQ Fiber Laser Marker 15W@1064 With 254S F-Theta Lens
986101030	UNIQ 1150-1A40 IR Fiber System	UniQ Fiber Laser Marker 15W@1064 With 254L F-Theta Lens

ACCESSORIES SELECTION AND ORDER INFORMATION

ORDER NUMBER	DESCRIPTION
985330031	Standard Control Box

Allied Automation, Inc.
800-214-0322
www.allied-automation.com

FDA Conforming to FDA regulations

Rev. 02, 10/2015

The company endeavours to continuously improve and renew its products; for this reason the technical data and contents of this catalogue may undergo variations without prior notice. For correct installation and use, the company can guarantee only the data indicated in the instruction manual supplied with the products. Product and Company names and logos referenced may be either trademarks or registered trademarks of their respective companies. We reserve the right to make modifications and improvements.